ACAD CODE:	323-DIN-75

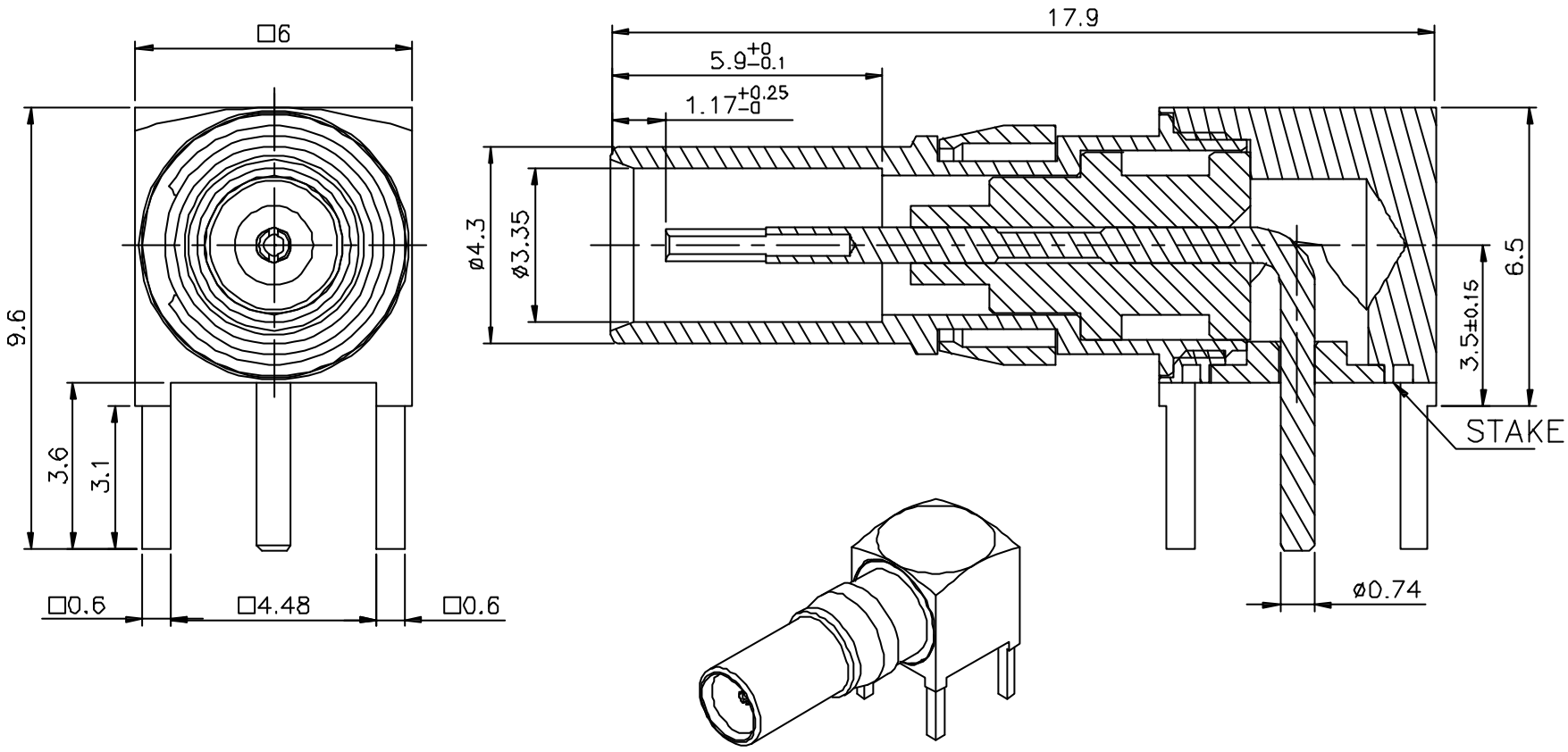

NOTES:
1. MATERIAL:
BODIES: BRASS, GOLD PLATED 30u".
CONTACTS: BERYLLIUM COPPER, GOLD PLATED 30u".
INSUATORS: PTFE.

NO.	DESCRIPTION	Q'TY	MATERIAL	PLATED

VISWAR TECHNOLOGIES

圖名 NAME	R/A CONNECTOR
圖號 DWG NO	323-DIN-75
單位 UNIT	MM
比例 SCALE	NONE
SHEET	1/1
一般公差 .X	±0.4
.XX	±0.2
.XXX	
ANGLES	
繪圖 DRAW. BY	AXL
校對 CHECKED	
審核 APPVL. BY	

REV	DESCRIPTION	DATE	NAME	ECN NO.
A	ISSUED	11/9/06'	AXL	