ACAD CODE:	BNCF-NF-158

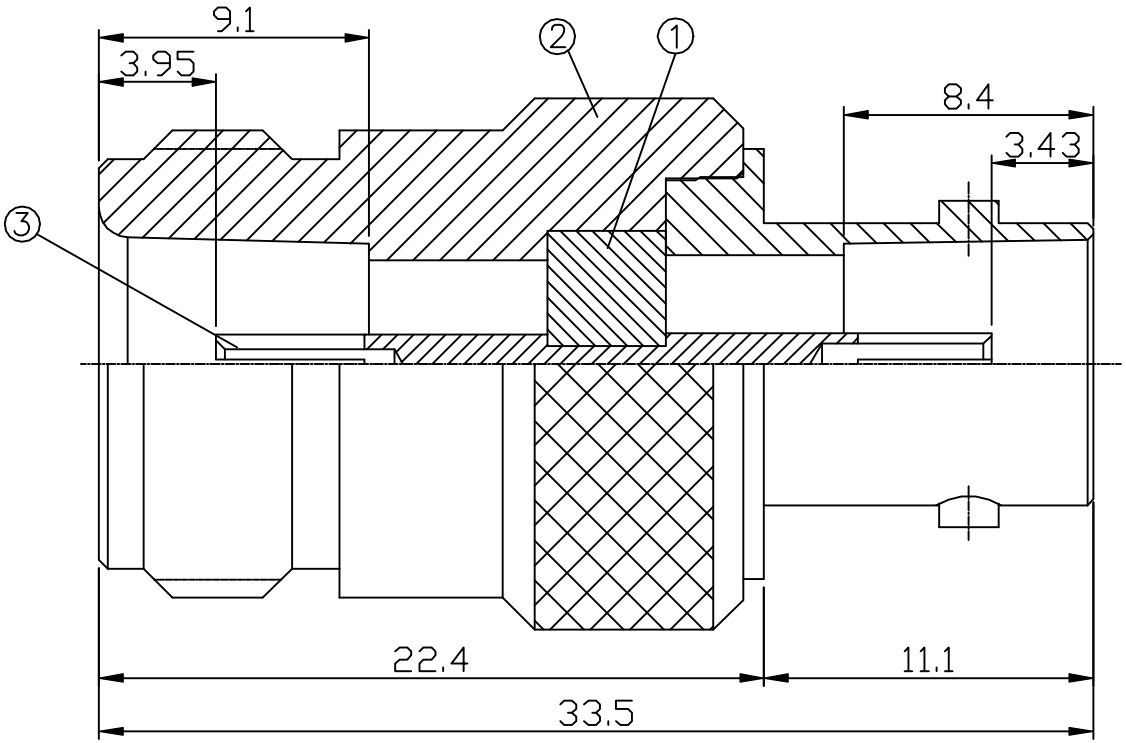

NO.	DESCRIPTION	Q'TY	MATERIAL	PLATED
3	CONTACT	1	BECU	Au
2	BODY	1	BRASS	Ni
1	INSULATOR	1	REXOLITE 1422	

VISWAR TECHNOLOGIES

圖名 NAME	BNCF-NF-158
圖號 DWG NO	
單位 UNIT	MM
比例 SCALE	NONE
SHEET	1/1
一般公差 .X	±0.2
.XX	±0.1
.XXX	
ANGLES	
繪圖 DRAW. BY	AXL
校對 CHECKED	
審核 APPVL. BY	

REV	DESCRIPTION	DATE	NAME	ECN NO.
A	*ISSUED*	4/18/02'	AXL	